Ex 9:
7/03/2026

DETERMINATION OF Z PARAMETERS OF TWO PORT NETWORK

Aim:

To Calculate and verify Z parameters of a two port network using Multisim Simulator.

APPARATUS REQUIRED.

Sno	Components	Specification	Quantity
1.	Power Supply		1
2	Multimeter		1
3.	Resistor	10kΩ, 10kΩ, ~~4.7k~~ 4.7kΩ	1
4	Bread board	---	1
5	Connecting wire	---	---
6.	PC with Multisim Simulator	---	---

THEORY:

A two-port network is an electrical circuit or device with two pairs of terminals. This makes possible the isolation of either a complete circuit or part of it. They are important in modeling electronic devices and system components.

CIRCUIT DIAGRAM

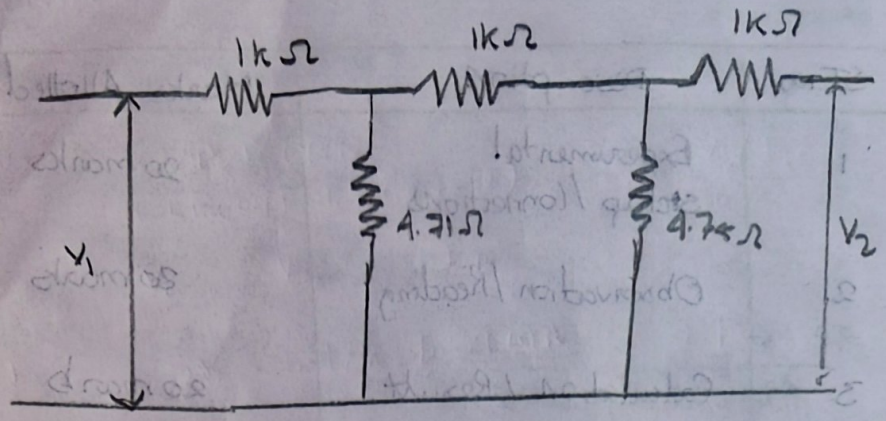

OUTPUT SHORT CIRCUITED:

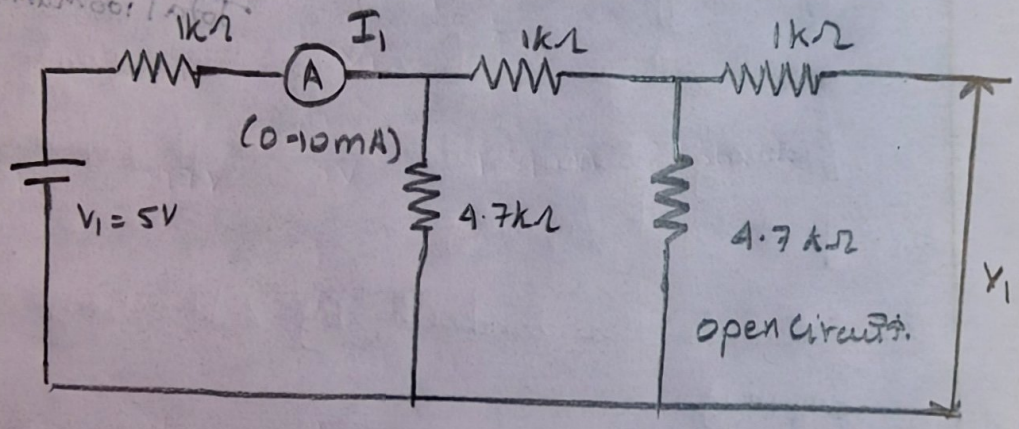

INPUT OPEN CIRCUITED:

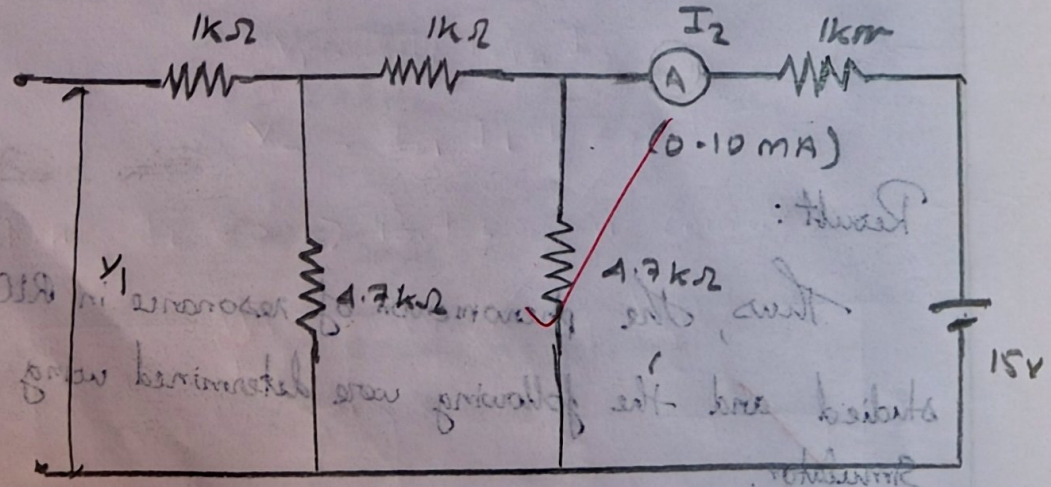

In Z parameters of a two port, the input & output voltage V_1 & V_2 can be expressed in terms of input & output current I_1 & I_2. Out of four variables (i.e V_1, V_2, I_1, I_2) V_1 & V_2 are dependent variable where I_1 & I_2 are independent variables. Thus,

$$V_1 = Z_{11} I_1 + Z_{12} I_2 \rightarrow (1)$$

$$V_2 = Z_{21} I_1 + Z_{22} I_2 \rightarrow (2)$$

Here Z_{11} & Z_{22} are the input & output driving points impedances while Z_{12} & Z_{21} are the reverse & forward transfer impedances.

PROCEDURE :

a) Connect the circuit as shown in fig & switch 'ON' the experimental board.

b) First open the O/P terminal & supply 5V to I/P terminal. Measure O/P voltage & I/P current

c) Secondly, open I/P terminal & supply 5V to O/P terminal. Measure I/P voltage & O/P current using multimeter

d) Calculate the value of z Parameter using Equation (1) & (2).

e) Switch 'OFF' the supply after taking thereadings.

OBSERVATION:

S. No	OUTPUT OPEN CIRCUITED ($I_2=0$)			$Z_{21} = V_2/I_1 (\Omega)$	$Z_{11} = V$
	V_1	V_2	I_1		
1.	5V	2.97V	1.39 mA	2.136 Ω	3.597

S. No	INPUT OPEN CIRCUITED ($I_1=0$)			$Z_{12} = V_1/I_2 (\Omega)$	$Z_{22} =$
	V_2	V_1	I_2		
1.	297V	5V	1.39 mA	2.136 Ω	3.597

Theoretical verification:

To find Z_{11} & Z_{21}

$$V_1 = Z_{11} I_1 + Z_{12} I_2$$

$$V_2 = Z_{21} I_1 + Z_{22} I_2$$

When $I_2 = 0 \Rightarrow$ Port 2 open circuited

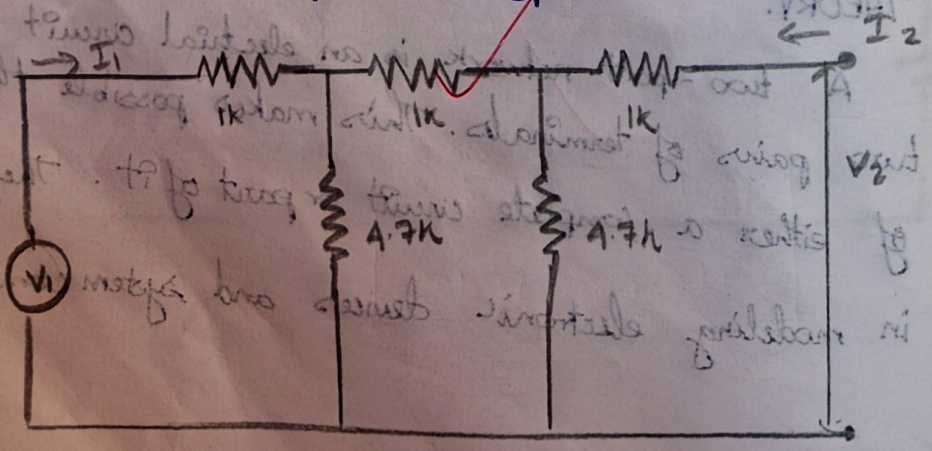

$$Req_1 = 1 + 4.7 = 5.7$$

$$Req_2 = \frac{5.7 \times 4.7}{5.7 + 4.7}$$

$$= 2.575$$

$$R = 2.575 + 1 = 3.575 k\Omega$$

By ohms law:

$$V_1 = I_1 R_1$$

$$\frac{V_1}{I_1} = R$$

$$Z_{11} = \frac{V_1}{I_1} = 3.575 k\Omega$$

By current division rule

$$I_2 = I_1 \times \frac{4.7}{4.7 + 1 + 4.7}$$

$$I_2 = \frac{4.7 I_1}{10.4}$$

$$I_2 = 0.451 I_1$$

Ohm's law

$$V_2 = I_2 \times 4.7$$

$$V_2 = 4.7 \times I_1 \times 0.451$$

$$\frac{V_2}{I_1} = 2.1197$$

$$Z_{21} = \frac{V_2}{I_1} = 2.1197 k\Omega$$

The networ is symmentric.

$$Z_{11} = Z_{22} \quad \& \quad Z_{21} = Z_{12}$$

$$Z = \begin{bmatrix} 3.575 & 2.1197 \\ 2.1197 & 3.575 \end{bmatrix}$$

Marks Split up:

Sl. No	Description	Mark Alloted	Mark obtain
1.	Experimental Setup / Connections	20 marks	20
2.	Observation / Reading	20 marks	18
3.	Calculation / Results	20 marks	18
4.	Viva	20 marks	18
5.	Record	20 marks	20
		Total 100marks	94

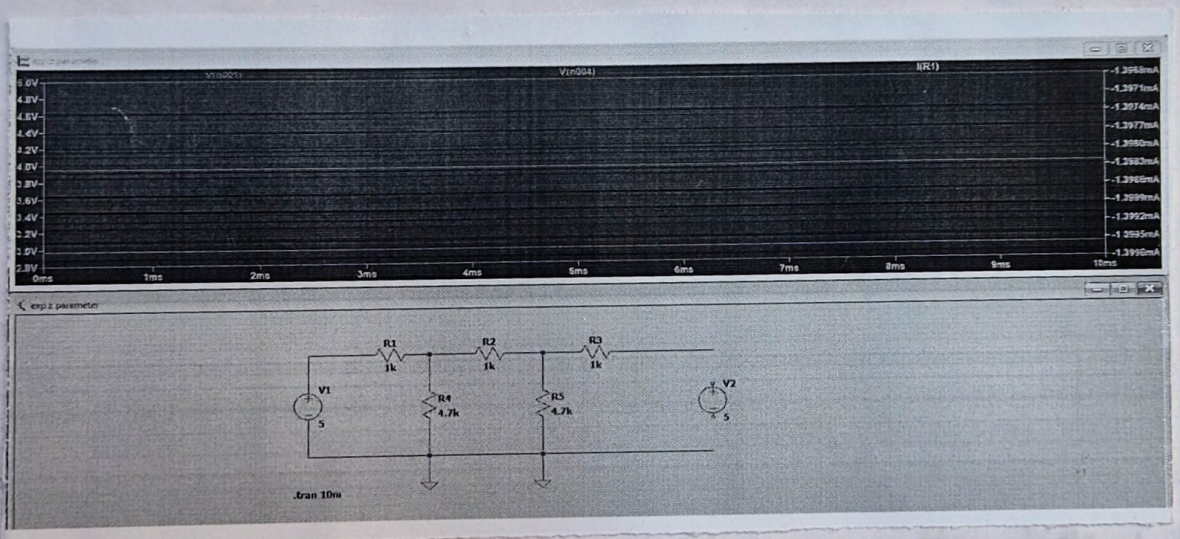

Result:

The Z-parameters of the two port network has been calculated and verified by using Multisim Simulator.